KRUPS
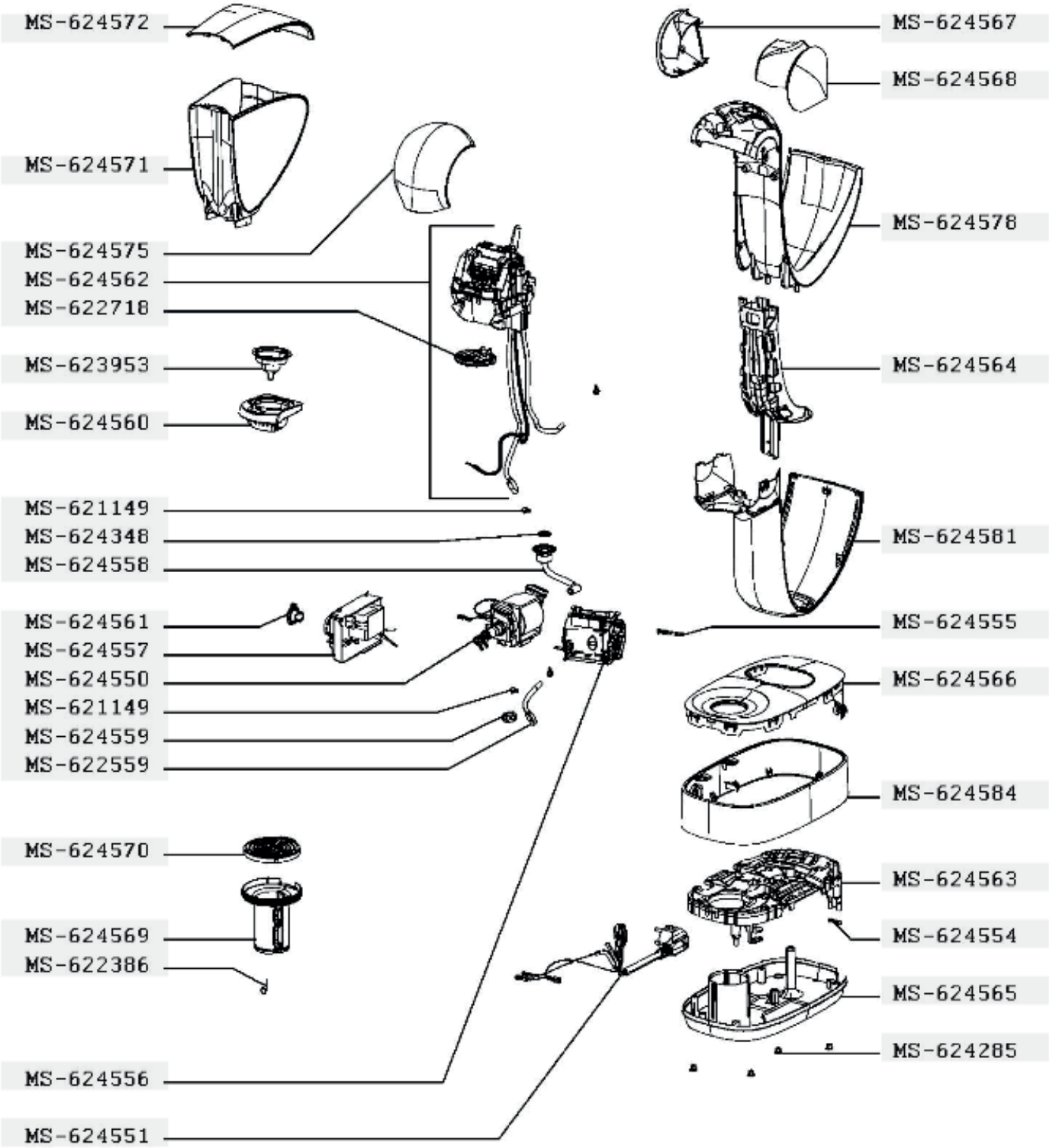
KP170110/7Z0